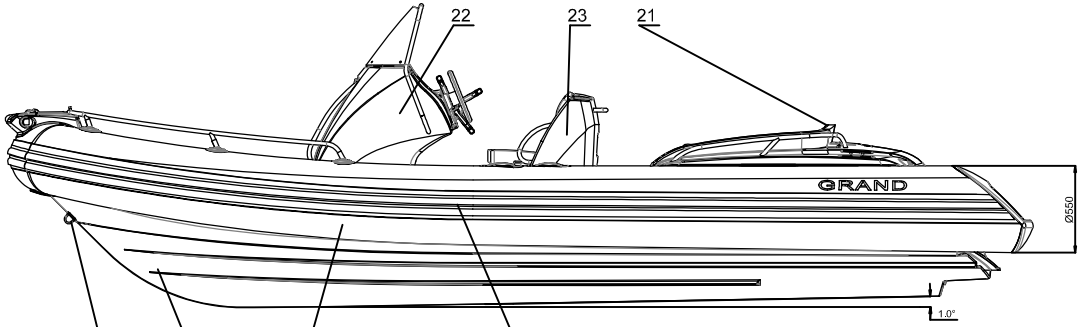

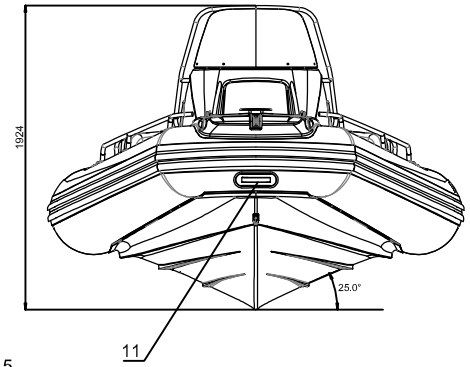

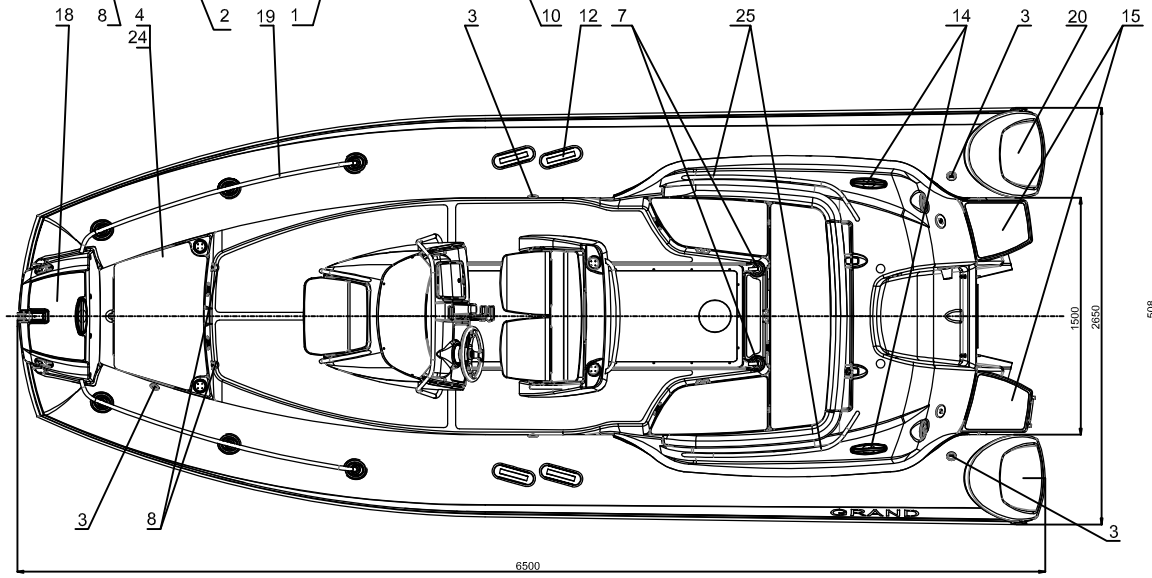

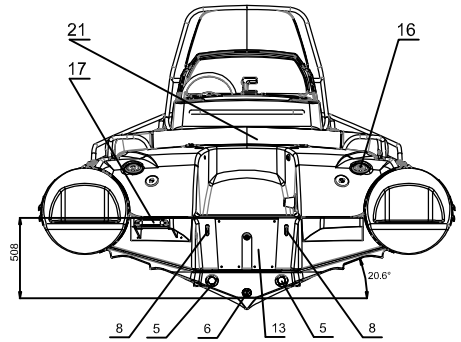

Zone	Item	Designation	Denomination	Q-ty	Remark
	1	36510	Inflatale tube	1	
	2	26510	Feberglass hull	1	
	3	4139	Inflation-deflation valve BRAVO-2005	5	
	4	1650.02	Bow hatch	1	
	5	4447	Drain valve. 50mm	2	
	6	70017	Sump plug 20mm	1	
	7	4441	Expanded drain hlug 42mm	2	
	8	4401	U-bolt M10x120	3	
	9	71293	U-bolt M10x60	2	
	10	4264	Rubbing stake with splash guard	1	
	11	4250	Bow grab handle	1	
	12	425002	Bow grab handle	4	
	13	52579	Motor plate extremal	1	
	14	4464	Pull-up cleat 8', top mount,steinless steel	2	
	15	2412	Swimming platform	0	
	16	1650.30	Rear waterski towing eye	2	
	17	2413	Ladder with slide	0	
	18	4650.01	Bow step plate (roller, fairleads, pull-up cleat)	1	
	19	4650.02	Stainless steel bow railing	2	
	20	3650.03	Fiberglass step	2	
	21	50610	Rear seat back	1	
	22	42152	Steering console CL-16	1	
	23	40307	Double seat SD-11	1	
	24	50609	Bow locker removable cushion	1	
	25	54357	Rear seat extended handrails	2	

PROPRIETARY AND CONFIDENTIAL
THE INFORMATION CONTAINED IN THIS DRAWING IS THE SOLE PROPERTY OF GRAND MARINE CORPORATION. ANY REPRODUCTION IN PART OR AS A WHOLE WITHOUT THE WRITTEN PERMISSION OF «GRAND MARINE CORPORATION» IS PROHIBITED.

UNLESS OTHERWISE SPECIFIED: DIMENSIONS ARE IN MILLIMETERS SURFACE FINISHES TOLERANCES LINEAR: ANGULAR:

FINISH:

DEBUR AND BREAK SHARP EDGES

DO NOT SCALE DRAWING | REVISION

	NAME	SIGNATURE	DATE
DRAWN	Borodin		
CHK'D	Drobyazko		
APPR'D	Grabenniikov		
MFG			
Q.A			

MATERIAL:

WEIGHT: | SCALE:1:7 | SHEET 1 OF 1

Golden Line G650

1171